TEMPERATURE SENSOR

T-131

Applications:

Temperature sensor for measurement of gasses, solid bodies, moving parts of machinery.

Technical Data

Measuring range	up to 350°C
Resistance element:	Pt100 up to PN-EN 60751+A2
	Pt1000, Pt500
Protection tube material	stainless steel 1H18N9T (1.4541)
Connecting cable	insulation teflon-overbraid (standard)
	others
Connection line	2, 3 or 4 wire

Ordering code

T - 131 - [ ] - [ ] - [ ] - [ ] - [ ] - [ ] - [ ] - [ ] - [ ] - [ ] - [ ]

Protection tube dia. d
- ⌀ 5 mm — 5
- others

Protection tube length Lc
- 20mm — 20
- others

Cable lenght Lp
- 1,5 m — 1,5
- others

Process connection dimensions
- M10x1 — M10x1
- others

Connection line
- 2-wire, 3-wire, 4-wire — 2

Ending type
- ending 1, 2, 3, 4 — e.g. 1

Tolerance
- class - A, B — e.g.B

Measuring insert
- Pt100, 2xPt100, others — e.g. Pt100

Connecting cable
- 1 - insulation teflon-overbraid — 1
- 2 - insulation teflon-silicone
- 3 - insulation silikone - silikone
- 4 - insulation PVC
- 5 - insulation teflon-teflon
- 6 - insulation fiberglass x 2 - overbraid
- others - table of cables

Assemble
- without spring - no signs
- with spring - S — S

Operating temperature
- 80°C, 200°C, others — e.g. 200°C

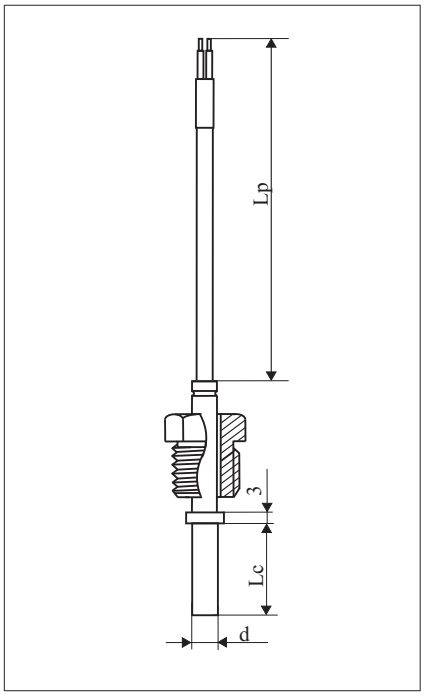

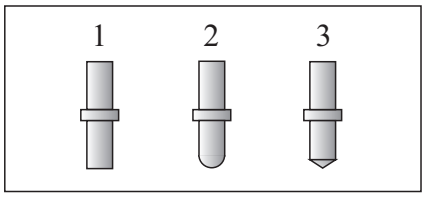

Order example:

T-131-5-20-1,5-M10x1-2-1-B-Pt100-1-S-200°C - sensor of protection tube diameter d=5 mm, length Lc=20 mm, length Lp=1,5 m, with thread M10x1, 2-wire, ending type 1, class B, Pt100, connecting cable insulation teflon-overbraid, with spring, operating temp. 200°C.

TERMO-PRECYZJA, ul. Krupnicza 7, Wrocław 50-075, tel./fax. (071) 342-69-48, 78-27-400,
www.termo-precyzja.com.pl, e-mail: biuro@termo-precyzja.com.pl